PROIZVOD

Founded in 1990.

TECHNICAL INSTRUCTION
For hot-water pellet boiler installation, use and maintenance
ABC GAMA

Technical specifications

TYPE				ABC GAMA
Power ratings			[kW]	15 - 35
Required chimney draught			[Pa]	15
Water content in the boiler			[lit]	85
Connection electric power			[W]	1300
Connection voltage			[V]	230
Frequency			[Hz]	50
Maximum work temperature			[°C]	85
Chimney lining diameter			[mm]	130 (h=1367)**
Boiler dimensions		depth	[mm]	855
		width	[mm]	1420 / 776*
		height	[mm]	1500
Boiler mass			[kg]	510
Maximum work pressure			[bar]	2,5
Chimney lining connection			[mm]	h=1367
Boiler connections	Outgoing line		Col	5/4” (h=508)**
	Return line		Col	5/4” (h=986)
	Charge and discharge		Col	1/2” (h=488)
	Air vent		Col	1/2” (h=1061)
	External air intake connection		⌀[mm]	100 (h=245)
Pellet tank volume			[lit]	255
Energetic efficiency			/	A+
The boiler class according to EN 303-5:2012			/	5

* Width of the boiler without the pellet tank
** Height of the connection from the floor

Additional equipment:

WIFI Module

4HEAT

Controlling the boiler via mobile phone

1.0. INTRODUCTION

The **ABC GAMA** boiler is designed for wood pellet firing. It is equipped with the burner made of quality inox material, resistant to high temperatures, automatic pelet firing, so as the function of automatic mechanic cleaning of the burner grate, which enables reliable functioning of the boiler in every mode, and work without cessation when low-quality pellet is used. Pipe heat exchanger cleaning is also automatized by the timed set-off of spiral tubulators. The boiler is equipped with multi-functional digital regulation, so as lambda probe which provides additional optimization of the combustion process in all modes. A simple constructional solution of outgoing and return water inside the boiler enables the prevention of boiler sub-cooling and untroubled work at low temperatures of the return line.

The steel hot-water **ABC GAMA** boiler was made of the materials of the highest quality in accordance with European regulations, welded with the latest robotic welding technology and certified according to the EU standard EN 303-5:2012, so it fulfils all general and particular requirements for the connection to the central heating system.

SY 100 Lambda controller enables the constant monitoring of oxygen percentage in exhaust gases. With the help of this function and combustion control in comparison to oxygen percentage in exhaust gases, the maximum degree of utilization is enabled, so as minimal emissions of carbon monoxide and harmful particles into the air.

1.1. INSTALLATION OF THE BOILER

During the installation of the boiler, all local regulations and european norms must be respected. The boiler can be connected to the open or closed central heating system. The installation itself must be performed in accordance with the technical standards by a qualified person who shall be responsible for the appropriate functioning of the entire system.

It is necessary to install the automatic air vent at the highest point of the boiler.

1.2. SAFETY INFORMATION

The boiler cannot be installed and commissioned in flammable and explosive environment. This boiler cannot be used by children or persons with reduced mental or physical abilities, so as persons with the lack of knowledge and experience, except if they are under supervision or trained by the person in charge of their safety. Children must be supervised near the boiler.

The boiler room must be protected from freezing and well-ventilated. The boiler must be installed so that it can be easily connected to the chimney, and enough space must be left for service, cleaning and maintenance.

1.3. GENERAL WARNINGS AND PROHIBITIONS

- Before the installation of the boiler, make sure that the delivery is complete, and if not, contact the vendor where the boiler was bought.
- The ABC GAMA boiler can be used exclusively for the design predicted by the manufacturer.

The manufacturer does not bear any responsibility for the damage inflicted on the persons, animals or objects in the event of errors during installation, regulation, maintenance or irregular use of the boiler.
- This instruction is an integral part of the boiler and must be kept. In the event of damage or disappearance, it is necessary to ask for a new copy from the vendor.
- Disposal of the easily flammable materials near the boiler and the firing door is prohibited. Ash has to be disposed of to the closed and non-flammable tanks.
- Burning waste and materials whose combustion causes flames or explosion danger (e.g. plastic bags, sawdust, breeze, mud, etc.) is prohibited.
- Any intervention by a technical person (this particularly refers to heater replacement or validity check of some other electric device...) or cleaning before unplugging the network power supply, is prohibited.

- The exposure of the boiler to atmospheric hazards is prohibited. This device is not predicted for the external installation.

- It is prohibited to put fingers and other objects through the openings on the external parts of the device lining. Inside the lining, there are electrical components and conductors under voltage, so as the mechanically moved devices (reduction gear and fan). The contact with them can cause electric shock and mechanical injuries.

2.0. COMMISSIONING THE BOILER

Before the commissioning, it is mandatory to read this instruction where the procedure of the first ignition of the boiler is explained in detail.

The first ignition of the boiler must be performed by a person authorized by the company ABC PROIZVOD LLC, or the warranty shall not apply.

2.1. CONNECTING THE BOILER TO THE CHIMNEY

A properly dimensioned and built chimney is a prerequisite for the reliable work of the boiler, so as the cost-effectiveness of heating. The chimney has to be well-insulated, and there must be chimney cleanout door in the lower part of the chimney. In order for the boiler to function properly, the height of the chimney must be enough to secure the appropriate draft of approximately 15Pa. Useful height of the chimney must not be lower than 4,5m (it is measured from the entrance of the chimney pipe to the top of the chimney). Internal chimney diameter must not be smaller than 160mm.

2.2. FUEL

The ABC GAMA boiler is designed for firing exclusively with wood pellet. The use of the certified pellet that should comply with the following standards:

ENplus A1; DINplus; DIN 51731

The characteristics of the pellet should satisfy the following values:

- caloric value 4,5 – 5kw/kg (17 – 18 MJ/kg)

- diameter 6mm

- maximum length 50mm

- maximum humidity ≤10%

- ash remains ≤1,5%

2.3. MINIMUM DISTANCES OF THE BOILER FROM A WALL

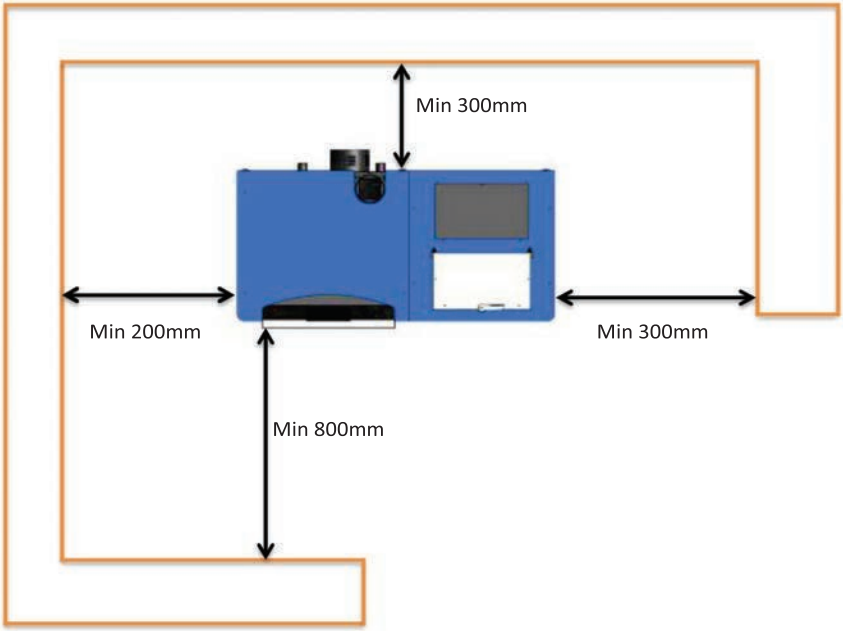

2.4. FRESH AIR INTAKE VENT

There must be a fresh air intake vent dimensioned in relation to the boiler power in the boiler room. This vent must be secured with a safety net or a grate. For calculating the vent size in relation to the boiler power, the following formula is used:

$A = 6{,}02 \times Q$ A – vent size in cm^2

Q – boiler power in kw

3. HEATING SYSTEM CONFIGURATIONS

1. Configuration 0

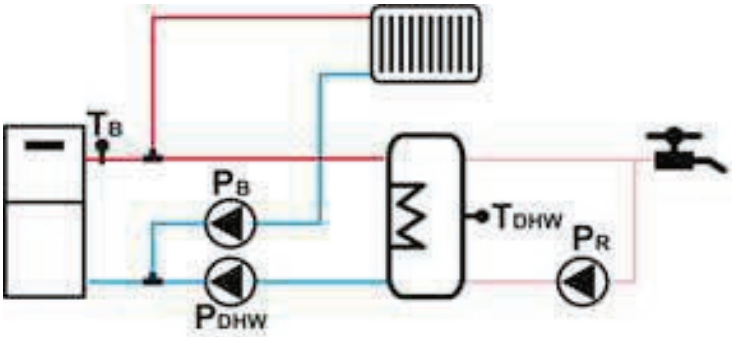

Fig. 1

By setting the parameter P26=0 we choose the configuration as in fig. 1

PB – pump of the boiler

TB – transducer of the boiler

PDHW – pump for the domestic hot water

TDHW – transducer for the domestic hot water

PR – pump for recirculation

HEATING

PB pump of the boiler is turned on via thermostat **Th86** and can be turned off via the room thermostat 1 if it is opened (A01=3-4). The pump is turned off for the priority of domestic hot water if the parameter **P102=2** and if the boiler temperature lower than **Th79**. For security reasons, the pump shall always turn on if the water temperature is below the thermostat **Th18** and if the water temperature in the boiler is above **Th21** or **Th25** or if the safety thermostat is activated (STB)

Domestic hot water

The production of domestic hot water is enabled if the parameter **P102**= 1 or 2 (1= has no priority; 2= has priority)

Winter mode

The PDHW pump is turned on via the **Th20** thermostat, but it is actually turned on only if the temperature in the heater is lower than **Th79** and the water temperature in the boiler is higher than the one in the heater for **Th81** degrees. The pump is turned off if the water temperature in the heater is bigger than **Th79.**

Summer mode

The PDHW pump works as described in the winter mode with one difference:
it is turned off via the heater thermostat **Th79** only if the heating pump is on**.**

Example:

Th18 = 5 °C, **Th86** = 50 °C, **Th20** = 40 °C, **Th21** = 70 °C, **Th81** = 5 °C, **Th79** = 55 °C, **P102** = 2

Boiler transducer	Water heater transd.	Modality	Mode	Temp. difference	Heating pump	PDHW pumpa
T< 5°C					**on**	off
5°C≤T<40°C					off	off
40°C≤T<50°C	T<55°C			<5°C	off	off
				>5°C	off	**on**
	T>55°C			<5°C	off	off
		Winter		>5°C	off	off
		Summer		>5°C	off	**on**
50°C≤T<70°C	T>55°C			<5°C	off	off
				>5°C	off	**on**
	T>55°C		Wood		**on**	off
		Winter	Pellet		**on**	off
		Summer	Pellet	<5°C	off	off
		Summer	Pellet	>5°C	off	**on**
T>70°C	T<55°C			<5°C	**on**	off
				>5°C	**on**	**on**
	T>55°C				**on**	off

2. Configuration 1

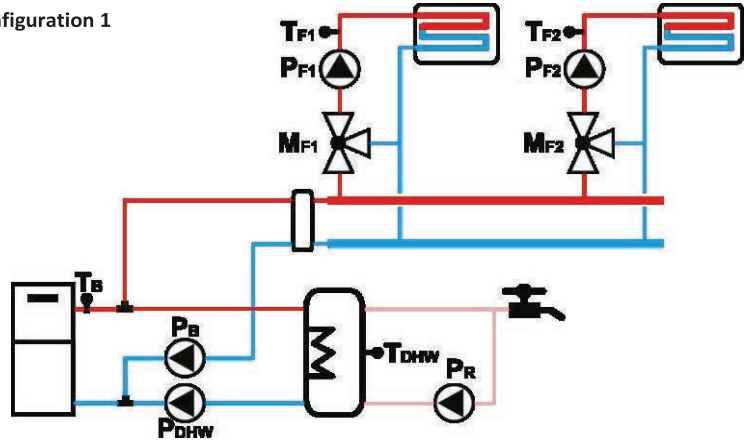

Fig. 2

By setting the parameter P26=1 we choose the configuration as in fig. 2

PB = pump of the boiler
PDHW = pump for domestic hot water
PR = pump for recirculation
MF1/MF2 = Zone (1/2) mixing valve
PF1/PF2 = Zone (1/2) heating pumps

TB = boiler transducer
TDHW = domestic hot water transducer
TF1 = Zone 1 transducer
TF2 = Zone 2 transducer

HEATING

Winter mode

PB pump is turned on if water temperature is higher than **Th19.** It is turned off if water temperature is higher than **Th86** i **Th87** and when the PF1 and PF2 pumps are off.
Zone 1: PF1 pump is always enabled. It is turned on via the thermostat **Th86** and can be turned off via the room thermostat 1 when the contact is opened.

Zone 2: PF2 pump is enabled if the parameter **P104**= 1 or 2. It is turned on via the thermostat **Th87** and can be turned off via the room thermostat 2 when the contact is opened. All three pumps are turned off in relation to the priority of domestic hot water if the parameter **P102**=2 and if the temperature of water in the boiler lower than **Th79.** For security reasons, all the pumps are turned on if the water temperature is below **Th18,** if it is higher than **Th21** and**Th25.**

Summer mode:

The **PB** pump works as described in the winter mode. **PF1 and PF2** pumps are off.

Domestic hot water

The production of domestic hot water is enabled if the parameter P102= 1 or 2 (1=has no priority; 2=has priority)

Winter mode:

PDHW pump is enabled via the thermostat Th20, but it is actually turned on only if the boiler temperature lower than **Th79** and water temperature in the boiler is higher than water temperature in the heater for **Th81** degrees. The pump is turned off if water temperature in the boiler is higher than **Th79**.

Summer mode:

PDHW pump works as described in the winter mode, but is turned off via the thermostat **Th79** only if the other pumps are on.

Example:

Th18 = 5 °C, **Th19** = 40 °C, **Th86** = 50 °C, **Th87** = 50 °C, **Th20** = 40 °C, **Th21** = 70 °C, **Th81** = 5 °C, **Th79** = 55 °C, **P102** = 2, **P104** = 1 o 2

Boiler transducer	Water heater transd.	Modality	Mode	Temp. difference	Heating pump	PF 1 pump	PF2 pump	DHW pump
T< 5°C					**On**	**On**	**On**	Off
5°C≤T<40°C					Off	Off	Off	Off
40°C≤T<50°C	T<55°C			<5°C	Off	Off	Off	Off
				>5°C	Off	Off	Off	**On**
	T>55°C			<5°C	**On**	Off	Off	Off
		Winter		>5°C	**On**	Off	Off	Off
		Summer		>5°C	**On**	Off	Off	**On**
50°C≤T<70°C	T>55°C			<5°C	Off	Off	Off	Off
				>5°C	Off	Off	Off	**On**
	T>55°C		Wood		**On**	**On**	**On**	Off
		Winter	Pellet		**On**	**On**	**On**	Off
		Summer	Pellet	<5°C	Off	Off	Off	Off
		Summer	Pellet	>5°C	Off	Off	Off	**On**
T>70°C	T<55°C			<5°C	**On**	**On**	**On**	Off
				>5°C	**On**	**On**	**On**	**On**
	T>55°C				**On**	**On**	**On**	Off

3. Configuration 2

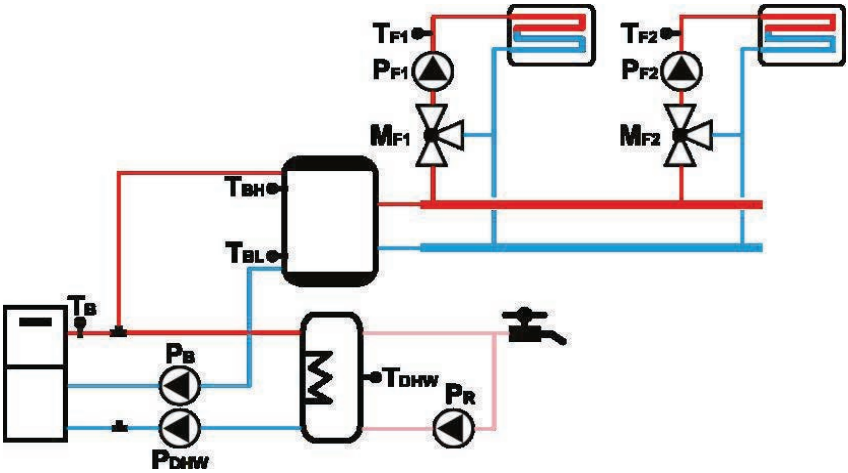

Fig. 3

By setting the parameter P26=2 we choose the configuration as in fig.3

PB = Pump of the boiler
PDHW = Pump for domestic hot water
PR = Pump for recirculation
MF1/MF2 = Zone (1/2) Mixing valve
PF1/PF2 = Zone (1/2) Circulation pumps

TB= Transducer of the boiler
TDHW = Transducer for domestic hot water
TBH = Transducer buffer high
TBL = Transducer buffer low
TF1 = Transducer Zone 1
TF2 = Transducer Zone 2

HEATING

Winter mode:

PB pump is enabled via the thermostat **Th19,** but it is actually turned on only if the boiler temperature is higher than the higher buffer transducer for **Th57** degrees. For the priority of domestic hot water, the pump shall turn off if the parameter **P102**=2 and if the boiler temperature is lower than **Th79.**

Zone 1: The **PF1** pump is always enabled. It is turned on via the thermostat **Th59** and can be turned off via the room thermostat 1 if the signal is opened.

Zone 2: The **PF2** pump is enabled if the parameter **P104** is 1 or 2. It is turned on via the thermostat **Th 84** and it can be turned off via the room thermostat 2 if the signal is opened.

For safety reasons, the pumps of Zone 1 and Zone 2 are turned on if water temperature drops below the thermostat **Th18** and if the buffer temperature is higher than the thermostat **Th 78.**

Summer mode:

The **PB** pump is turned off in the pellet mode and turned on in the wood mode. The pumps **PF1 and PF2** are turned off.

Domestic hot water

The production of domestic hot water is enabled if the parameter **P102** is **1 or 2** (1=has no priority; 2= has priority)

Winter mode: The **PDHW** pump is enabled via the thermostat **Th 20** but it is actually turned on if the water temperature in the heater is lower than **Th79** and if the water temperature in the boiler is higher than the one in the heater for **Th81** degrees. The pump is turned off if the water temperature in the heater is higher than **Th79.**
Summer mode: The **PDHW** pump works as described in the winter mode but is turned off via the thermostat **Th79** only if the **PB** pump is on.

Primer:

Th18=5°C; Th19=40°C; Th20=40°C; Th21=70°C; Th57=5°C; Th81=5°C; Th79=55°C; P102=2

Boiler transducer	**Water heater transducer**	**Modality**	**Mode**	**TBH difference**	**DHW difference**	**Boiler pump**	**DHW pump**
T<5°C						**On**	Off
5°C≤T<40°C						Off	Off
40°C≤T<70°C	T<55°C			<5°C	<5°C	Off	Off
				<5°C	>5°C	Off	**On**
				>5°C	<5°C	**On**	Off
				>5°C	>5°C	Off	**On**
	T>55°C		Wood	<5°C		Off	Off
			Wood	>5°C		**On**	Off
		Winter mode	Pellet	<5°C		Off	Off
		W. mode	Pellet	>5°C		**On**	Off
		Summer mode	Pellet		<5°C	Off	Off
		S. mode	Pellet		>5°C	Off	**On**
T>70°C	T<55°C				<5°C	**On**	Off
					>5°C	**On**	**On**
	T>55°C					**On**	Off

Example:

Th18=5°C; Th59=60°C; Th84=80°C; P104=1 or 2

Boiler transducer	TBH	Modality	Mode	PF1 pump	PF2 pump
T<5°C				**On**	**On**
T>5°C	T<60°C			Off	Off
	60°C≤T<80°C	Winter mode		**On**	**On**
		Summer mode		Off	Off
	T>80°C			**On**	**On**

4. Configuration 3

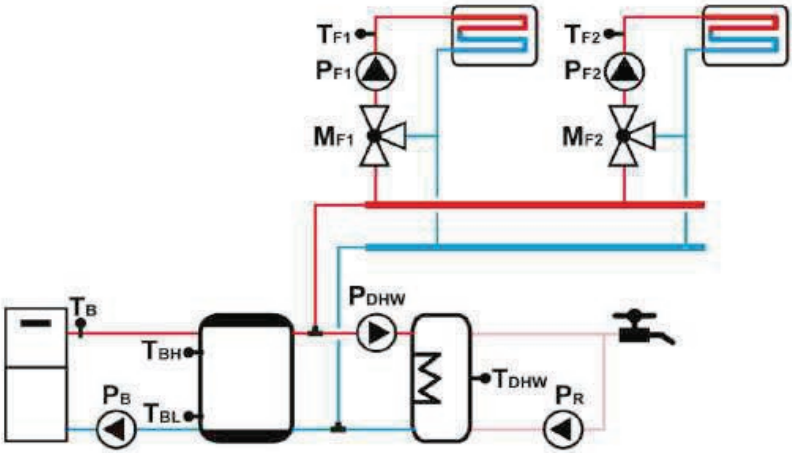

Fig. 4

By setting the parameter P26=3 we choose the configuration as in fig. 4

TB= Transducer of the boiler

PB = Pump of the boiler

PDHW = Pump for domestic hot water

TDHW = Transducer for domestic hot water

TBH = Transducer Buffer High

PR = Pump for recirculation
MF1/MF2 = Zone (1/2) Mixing valve
PF1/PF2 = Zone (1/2) Circulation pumps

TBL = Transducer buffer low
TF1 = Transducer Zone 1
TF2 = Transducer Zone 2

HEATING

Winter mode

The **PB** pump is turned on via the thermostat **Th19,** but is actually turned on only if the temperature in the boiler higher than Higher Buffer Transducer for **Th57** degrees. For safety reasons, the pump is turned on if the water temperature drops below **Th18** or rises above the thermostats **Th21 or Th25.**

Zone 1: The **PF2** pump is enabled via the parameter **P104=1 or 2,** it is turned on via the thermostat **Th84** and can be delivered via the room thermostat 2 if the contact is opened. The pumps of Zone 1 and 2 are turned off if the marked priority for domestic hot water **P102=2** and if the water temperature in the boiler is lower than **Th79.** For safety reasons, the pumps are turned on if the temperature drops below the thermostat **Th18** and if the buffer temperature rises above the thermostat **Th78.**

Summer mode:

The **PB** pump works as described in the winter mode. The PF1 and PF2 pumps are turned off. For safety reasons, all pumps are turned on.

Domestic hot water

The production of domestic hot water is enabled if the parameter **P102=1 or 2** (1-has no priority; 2-has priority)

Winter mode:

The **PDHW** pump is turned on if the water temperature in the heater is lower than **Th79** and if the Higher Buffer Transducer temperature is higher than the heater temperature for **Th81** degrees. The pump is turned off if the water temperature in the heater is higher than **Th79**.

Summer mode:

The **PDHW** pump works as described in the Winter mode.

Example:

Th18=5°C; Th19=40°C; Th21=70°C; Th57=5°C

Boiler transducer	Modality	Mode	TBH difference	Boiler pump
T< 5°C				**On**
5°C ≤ T < 40°C				Off
40°C ≤ T < 70°C			< 5°C	Off
			> 5°C	**On**
T > 70°C				**On**

Example:

Th18=5°C; Th59=60°C; Th84=60°C; Th78=80°C; Th81=5°C; Th79=55°C; P102=2

BT	TBH	TDHW	Modality	Mode	DHW difference	PF1pump	PF2pump	Pumpa sanitarne vode
T< 5°C						**On**	**On**	Off
T>5°C	T<60°C				T< 5°C	Off	Off	Off
		T<55°C			T>5°C	Off	Off	**On**
		T>55°C				Off	Off	Off
	60°C≤T<80°C	T<55°C			T< 5°C	Off	Off	Off
					T>5°C	Off	Off	**On**
		T>55°C	Winter mode			**On**	**On**	Off
			Summer mode			Off	Off	Off
	T>80°C	T<55°C			T< 5°C	**On**	**On**	Off
					T>5°C	**On**	**On**	**On**
		T>55°C				**On**	**On**	Off

5. Domestic hot water function

The production of domestic hot water is enabled in each of the four configurations if the parameter **P102=1 or 2.** If there is a request for domestic hot water, the **DHW** function is activated, the thermostat of the boiler

becomes equal to the value of the thermostat **Th88** and combustion is set to this value.
When there are no more requests for domestic hot water, the function stops after the **T68** time expires.

5.1. Operating the buffer (impounding hot water tank)

In order to enable this function, we need to choose the configuration 2 or 3 (P26=2 or 3). Readings are performed via two transducers (one in the higher part of the buffer, the other in the lower one).

Functioning:

If the temperature of the higher transducer is lower than the thermostat **Th58,** the accumulation heating cycle begins. When the water temperature has reached **Th58** in the higher zone, but not **Th85** value in the lower one, the cycle continues and the controller works normally. At the moment when the thermostat temperatures **Th58** i **Th85** are reached in both parts of the accumulation, the heating cycle stops and the system goes to the **Standby** mode. The heating cycle starts again when the temperature in the higher part of the buffer drops below the thermostat **Th58** value, minus its hysteresis **Ih58**.

4. THE BOILER COMPONENTS AND CONNECTING

Front side of the boiler

Rear side of the boiler

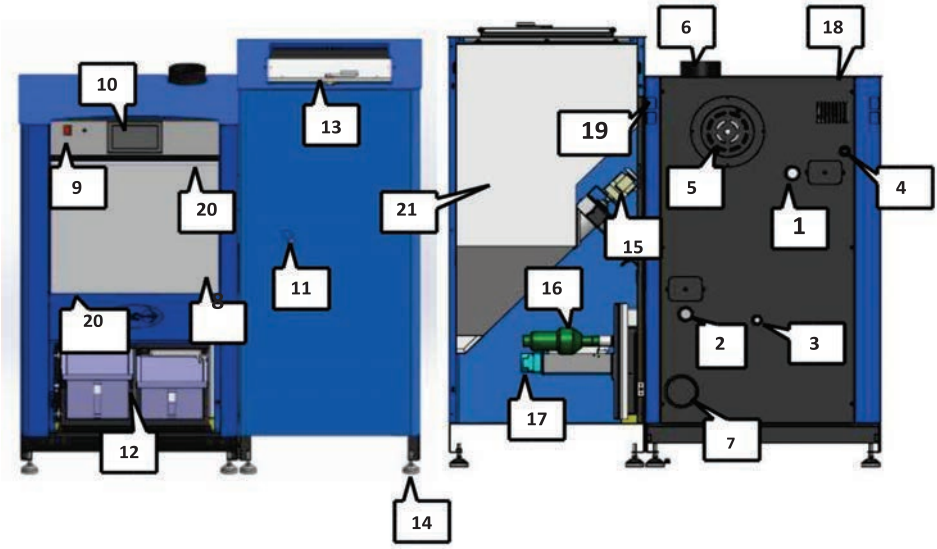

1. Return line
2. Outgoing line
3. Boiler charge and discharge
4. Air vent
5. Fan
6. Chimney lining
7. Fresh air intake pipe
8. Control panel cover
9. The main switch
10. Display
11. Flame visualization
12. Ash containers
13. Pellet tank cover
14. Boiler leveling rates
15. Reduction gear motor
16. Pellet-ignition fan
17. Burner grate cleaning motor
18. Heat exchanger cleaning motor
19. Safety thermostat (STB)
20. Module SY Plug 01 (wi-fi module)
21. The pellet tank

5. THE FIRST COMMISSIONING OF THE BOILER

5.1. Before the commissioning / The boiler configuration

The boiler must be connected to the central heating system before the commissioning.

Note:
The optimal efficiency of the boiler and reliable work with low emissions of harmful particles can be guaranteed only if the system is adjusted by the professionals trained by *ABC PROIZVOD L.L.C.*

- The configuration of the boiler's work system is to be chosen in relation to the existing installation (the factory system is set to the 0 configuration. See Fig. 1)

- Check the system pressure

- Check if the system is fully vented

- Check the connection of the safety devices and their operation

- Check if the boiler room is properly vented

- Check the boiler door sealing and all the other inspection vents

- Check if the microswitch on the door works properly

- Check if the chimney lining is properly connected to the chimney

- Check if the chimney is properly dimensioned

The user is responsible for providing the following services before setting the system in motion:

1. Electric installation
2. Pipeline installation
3. Connection to the appropriate chimney

During the commissioning, the maintenance staff is obligated to train the end user how to use the boiler in the future.

6. INSTRUCTION FOR USING THE ELECTRIC PART

6.1 THE MAIN BOARD

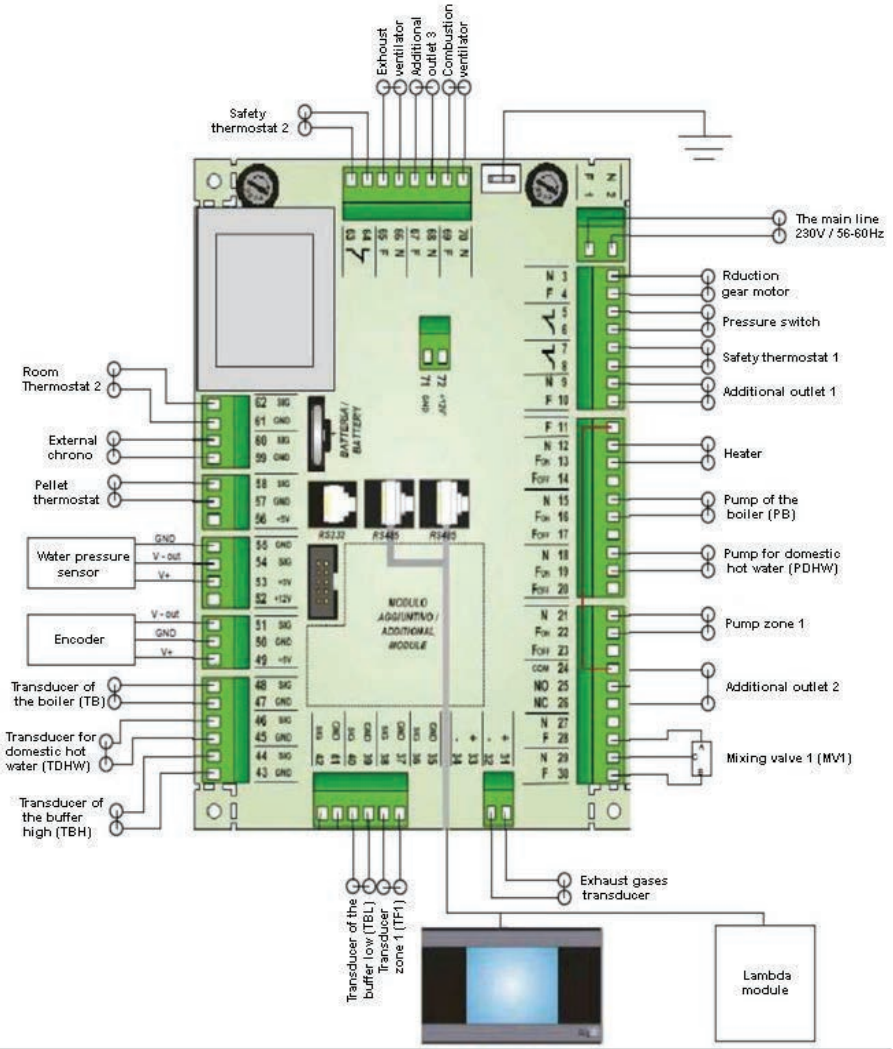
Exhaust ventilator
Additional outlet 3
Combustion ventilator
Safety thermostat 2
The main line 230V / 56-60Hz
Rduction gear motor
Pressure switch
Safety thermostat 1
Additional outlet 1
Room Thermostat 2
External chrono
Pellet thermostat
Heater
Pump of the boiler (PB)
Pump for domestic hot water (PDHW)
Water pressure sensor
GND
V - out
V+
Encoder
Pump zone 1
Additional outlet 2
Transducer of the boiler (TB)
Transducer for domestic hot water (TDHW)
Mixing valve 1 (MV1)
Transducer of the buffer high (TBH)
BATTERIA / BATTERY
RS232
RS485
RS485
MODULO AGGIUNTIVO / ADDITIONAL MODULE
Exhaust gases transducer
Transducer of the buffer low (TBL)
Transducer zone 1 (TF1)
Lambda module

6.2 ADDITIONAL MODULE

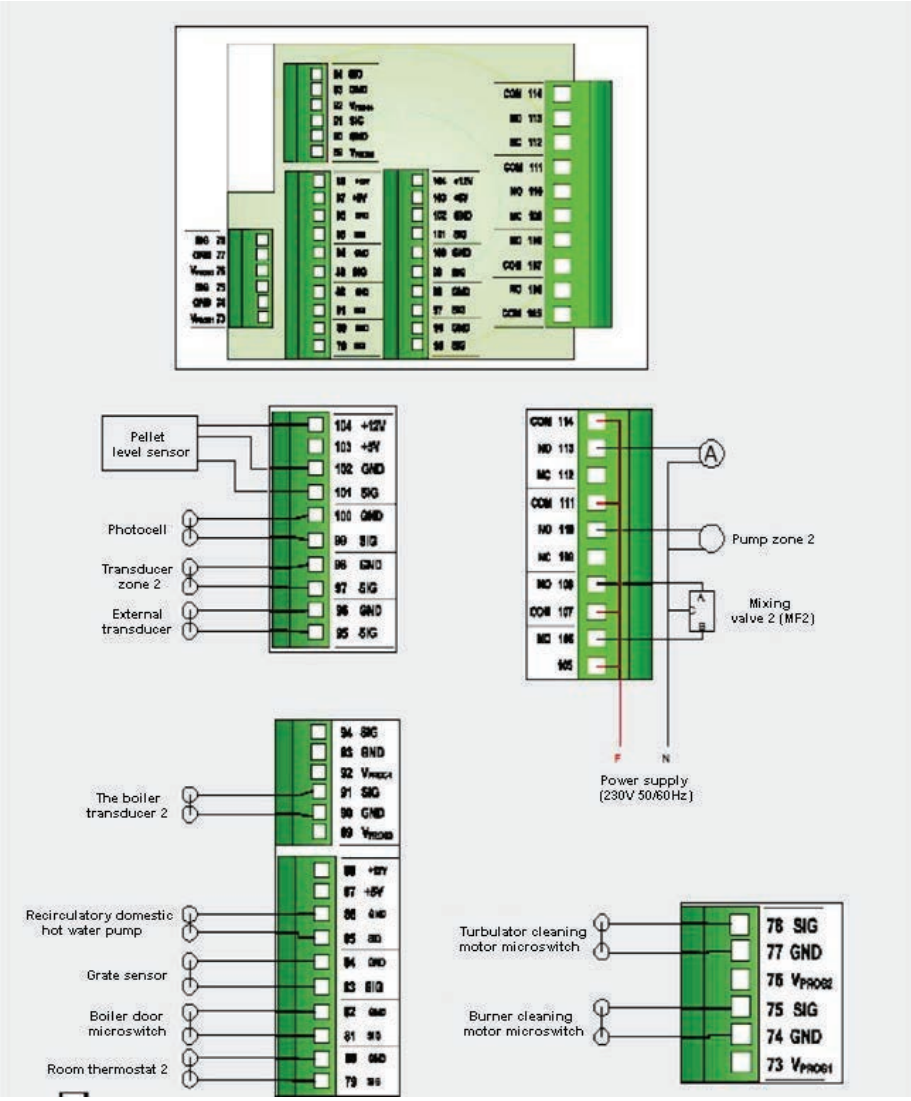

PINS	FUNCTIONS	TECHNICAL SPECIFICATIONS
1-2	Power supply	230Vac ± 10% 50/60 Hz Fuse T 6,3A
3-4	Reduction gear 1 (triac outlet)	Triac ON / Off (outlet under voltage) Max 3A
5-6	Pressure switch	High voltage outlet Open/Closed contact
7-8	Safety thermostat 1	High voltage outlet Open/Closed contact
9-10	Additional 1 outlet (Triac)	Triac ON / Off (outlet under voltage) Max 3A
11	Live phase	Max 6,3A
12-13	Heater	ON/Off Relay (outlet under voltage) Max 3A
15-16	Pump of the boiler	ON/Off Relay (outlet under voltage) Max 3A
18-19	Pump for DHW (PDHW)	ON/Off Relay (outlet under voltage) Max 3A
21-22	Pump Zone 1 (PF1)	ON/Off Relay (outlet under voltage) Max 3A
24-26	Additional 2 outlet	ON/Off Relay Max 3A
28-29-30	Mixing valve 1 (MF1)	ON/Off Relay (outlet under voltage) Max 3A
31-32	Exhaust gas transducer	Thermocouple: 31: red (+) 32: green (-)
37-38	Transducer Zone 1 (TF1)	Analog input
39-40	Transducer Buffer Low (TBL)	Analog input
41-42-52	Differential pressure sensor	Analog input 41: GND 42: Signal 52: +12V
43-44	Transducer buffer high(TBH)	Analog input
45-46	Transducer for DHW (TDHW)	Analog input
47-48	Transducer of the boiler (TB)	Analog input
49-50-51	Encoder	Digital input 49: +5V 50: GND 51: Signal
53-54-55	Water pressure sensor	Analog input 53: +5V 54: Signal 55: GND
57-58	Pellet thermostat	Digital input
59-60	External chrono	Digital input
61-62	Room thermostat 1	Digital input
63-64	Safety thermostat 2	High voltage input. Open/Closed contact
65-66	Exhaust ventilator (Triac outlet)	Triac control(outlet under voltage) Max 1,8A
67-68	Additional 3 outlet(Triac outlet)	Triac control (outlet under voltage)

		Max 1,8A
69-70	Combustion ventilator (Triac outlet)	Triac kontrola(outlet under voltage) Max 1,8A
71	GND (Grounding)	
72	+12V	
74-75	Burner-cleaning motor microswitch	Digital input
77-78	Turbulator-cleaning motor microswitch	Digital input
79-80	Room thermostat 2	Digital input
81-82	Boiler door microswitch	Digital input
83-84	Grate sensor	Digital input
85-86	Recirculation DHW pump	Digital input
90-91	Boiler transducer 2	Analog input
95-96	External transducer	Analog input
97-98	Transducer Zone 2 (TF2)	Analog input
99-100	Photocell	Analog input
101-102-104	Pellet level sensor	Digital input 101: Signal 102: GND 104: +12V
105-106-107-108	Mixing valve 2 (MF2)	ON/Off 2 Relay Max 2A
110-111	Pump Zone 2 (PF2)	ON/Off Relay Max 2A
RS 232	Serial connection to PC/communic. device	1 RS 232 Serial input
RS 485	RS 485 serial connection(lambda module,display,remote display)	2 RS 485 Serial input
⏚	Grounding ALWAYS CONNECT	

6.3 LAMBDA MODULE

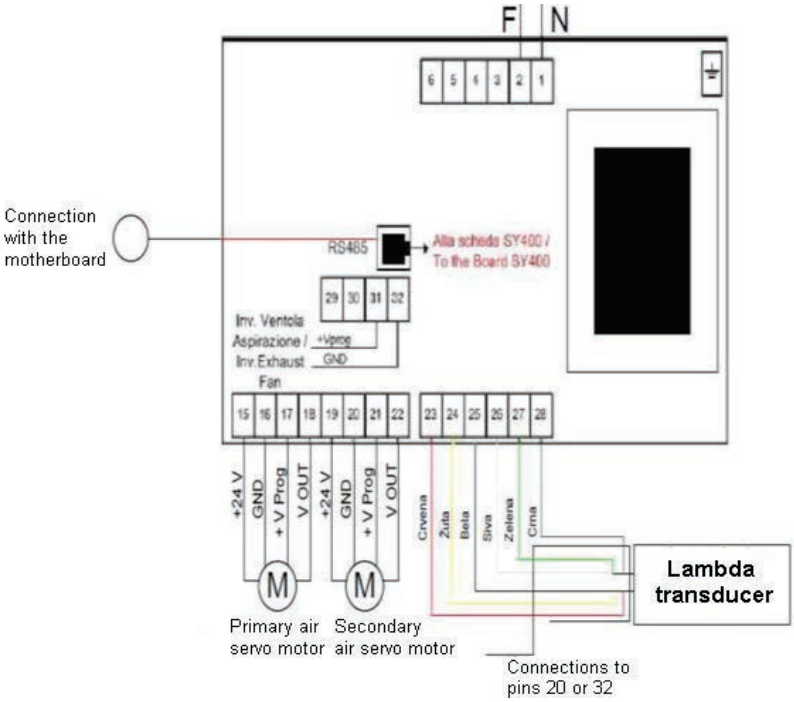

	SY Lambda 100 Connecting
PINS	FUNCTIONS
1-2	Power supply 230Vac ±10% 50-60 Hz
23-24-25-26-27-28	Lambda transducer: 23 red wire 24 yellow wire 25 white wire 26 gray wire 27 green wire 28 black wire
15-16-17-18	Primary air servo motor: 15: +24V 16: GND 17: Programmed motor voltage 0-10Vdc / 10mA Max (Vin) 18: Return motor voltage (Vout)
19-20-21-22	Secondary air servo motor: 19: +24V 20: GND 21: Programmed motor voltage 0-10Vdc / 10mA Max (Vin) 22: Return motor voltage (Vout)
RS 485	For SY 400 motorboard
⏚	Grounding ALWAYS CONNECT

7 SWITCHING ON THE REGULATION

After turning on the main switch, the following screen will appear on the display:

The screen is sensitive to touch and enables the switch to the following screen by simply swiping the finger diagonally or vertically.

Up - Down Left - Right

7.1 DEFAULT SCREEN 1

Button selection on the screen:

	Turning the boiler on and off		Access to the info menu
	Access to the user menu 1		Access to the time setting (chrono)
	Access to the user menu 2		Access to the list of errors (saving up to 64 errors)

The main lamps:

The arrow at the top of the default screen enables you to access the special lamps quickly.

	Set combustion power		“Chrono” function status		Winter mode
	Summer mode		Pellet		Wood

	Wood/Pellet		Climatic function		

7.2 DEFAULT SCREEN 2

By swiping our finger left-right across the screen, we choose the default screen 1 or 2.

System function lamps:

	Pellet-ignition fan		Reduction gear is on		Zone 1 pump is on
	Zone 2 pump is on		The boiler pump is on	L6	Additional outlet 1 active
L7	Ancillary outlet 2 active	L8	Ancillary outlet 3 active	L9	Ancillary outlet 4 active
	Lack of pellet		Open contact for the room therm.		DHW pump active

7.3 ERROR DESCRIPTION AND NOTIFICATIONS

Er 01	Safety thermostat 1 (High voltage)
Er 02	Safety thermostat 2 (High voltage)
Er 03	Turning off due to exhaust gases low temperatures
Er 04	Turning off due to the water temperature in the boiler being too high
Er 05	Turning off due to the exhaust gases temperature being too high
Er 06	Pellet thermostat
Er 07	Encoder error. No signal
Er 08	Encoder error. The problem with fan speed adjustment
Er 09	Low boiler water pressure
Er 10	High boiler water pressure
Er 11	Clock adjustment error

Er 12	Unsuccessful ignition
Er 14	Pressure switch error
Er 15	Turning off due to lack of power supply for longer than 50 minutes
Er 16	RS 485 Communication error
Er 18	Lack of pellet in the tank
Er 20	Burner grate sensor error
Er 22	Lambda transducer regulation error
Er 23	Boiler transducer, DHW transducer, zone 1 and 2 transducer, buffer transducer open
Er 25	Broken burner cleaning grate motor
Er 26	Broken heat exchanger cleaning motor
Er 34	Pressure below the defined minimum
Er 35	Pressure above the defined maximum

Errors connected to the lambda transducer

EL 00	Generic error. Turn the boiler off and on using the main switch
EL 01	Heater sensor is connected to grounding. Turn of the boiler using the main switch and check the connection of the lambda transducer. Replace the sensor.
EL 02	Sensor heater opened. Turn off the controller and check the connection of the lambda transducer. Replace the sensor.
EL 03	Sensor heater opened. Turn off the boiler using the main switch and check the connection of the lambda sensor. Replace the sensor.
EL 04	The lambda sensor connected to grounding. Turn off the boiler using the main switch and check the connection of the lambda sensor. Replace the sensor.
EL 05	Low heater voltage. Turn lambda module off the 230 Vac supply and check all the fuses on the board. Check if the voltage is within the limits 230 Vac ±20%
EL 06	Low lambda sensor voltage Turn lambda module off the 230 Vac supply and check all the fuses on the board. Check if the voltage is within the limits 230 Vac ±20%
EL 07	Glitch on the heater sensor. Check if the sensor is heated. Turn the controller on and off and restart the process. there is a short circuit caused by the on the.
EL 08	The lambda sensor overheated. The sensor must not be exposed to flame nor the exhaust gas temp. higher than 700 C. Move it away or let it work on lower temperatures

- **Other messages**

Sensor	Shows the temp. transducers' status. This message appears during the ,,Checkup,, phase Showing that the readings on one or more transducers are equal to the minimum or maximum values, depending on the transducer they refer to. Check if the transducers are open or shorted.
Service	The message indicates that the previously set number of working hours is reached (the parameter T66) for the boiler maintenance
Cleaning	The message indicates that the previously set number of working hours is reached (the parameter T67) for the cleaning of the boiler
Blocked	The alternative message of the current state appearing if the system is not manually turned off during the ignition. It will actually turn off when it reaches the maximum combustion power
Door	The boiler door is open
Link Error	The lack of communication between the display and the motherboard
Transfer failed	The message appears if the change of the parameter values has failed. Try to reload the parameters

- Visualization

To access the visualization, press the symbol in the top right corner of the screen

Exhaust gases T (C°)	Current exhaust gases temperature
Boiler T (C°)	Water temperature in the boiler
Boiler 2 T (C°)	Water temperature in the boiler 2
Zone 1 T (C°)	Water temperature Zone 1 (visible only if P103=2)
Zone 2 T (C°)	Water temperature Zone 2 (visible only if P104=2)
Water heater T (C°)	Domestic hot water temperature (visible only if P102=1 or 2)
Buffer high T (C°)	Water temperature in the high buffer (visible only if P26=2 or 3)
Buffer low T (C°)	Water temperature in the low buffer (visible only if P26=2 or 3)
External T (C°)	External temperature (visible only if P74=1 and if the mixing valve is connected)
Pressure (mbar)	Water pressure in the boiler
Oxygen (%)	Oxygen percentage in exhaust gases (visible only if P66=1)
Pressure reduction (Pa)	Sub-pressure in the boiler (visible only if A30=1 or 2)
Fan speed(rpm)	Fan RPM (visible only if P25=1 or 2)
Reduction gear (s)	Time of work of the reduction gear
Reception(rb)	Number of receptions
Product code	Product code
FSYSB01000217.0.1	Motherboard firmware version
FSYSF01000263.0.1	Display firmware version

8 USER MENU

To access the settings menu, press

MENU		DESCRIPTION
Combustion adjustment	Function	Menu for changing the mode of combustion. Visible only if the parameter P11=2,3,4
	Pellet power	Menu for setting the combustion power in the pellet mode. Visible only if P11 is different from 1
	Wood power	Menu for setting the combustion power in the wood mode. Visible only if P94=0 and P11 is different from 0
	Pellet reception	Menu for choosing pellet combustion reception Visible only if P04 is bigger than 1 and P11 is different from1
	Reduct. gear calibration	Menu for changing the work time of the reduction gear Visible only if P11 is different from 1
	Fan calibration	Menu for modifying the fan speed. Visible only if P11 is different from 1
Heating adjustment	Boiler thermostat	Menu for adjusting the water temp. in the boiler Visible only if A66=0 and P11=1
	DHW thermostat	Menu for changing the value of the DHW thermo-stat. Visible only if P102=1 or 2
	Zone 1 thermostat	Menu for changing the value of the Zone 1 therm. Visible only if P103=2
	Zone 2 thermostat	Menu for changing the value of the Zone 2 therm. Visible only if P104=2
	Winter - Summer	Menu for choosing the mode of the boiler
	Climatic function	Menu for managing the climatic function. Visible only if P74=1 and mixing valves installed
Remote display	Room thermostat	Menu for changing the room therm. value on the remote display.Visible only if A52>0
	Enables	Room thermostat function activation. Visible only if A52>0
Chrono	Menu for time setting activation for turning the boiler on and off	
Manual charging	Menu for charging the worm transporter with pellet	
Service reset	Menu for the dismissal of the service alarm T67	

To access the adjustments menu, press

MENU		DESCRIPTION
Display settings	Date and time	Menu for setting date and time
	Language	Menu for choosing the desired language
Display menu	Display lighting	Adjusting the screen light
	Display contrast	Adjusting the screen contrast
	Minimum display lighting	Setting the screen light when it is in Standby mode
	Display address	Menu for setting the address RS 485
	System list	In this menu, the following can be read: Communication version of the board, the board address, type of the board and the firmware ver.
	Acoustic alarm	Turn the acoustic display alarm on and off
System menu	This menu enables you to enter the technical menu (password required)	

8.1 Time setting for turning the boiler on and off (CHRONO)

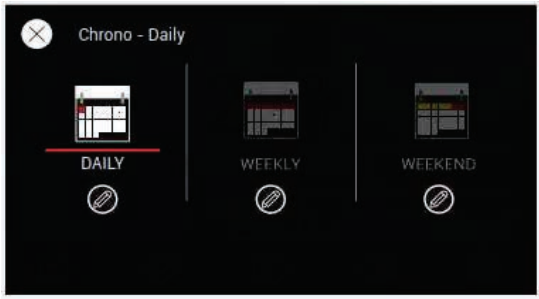

To set the chrono program, choose one of the offered options:

- (Daily)
- (Weekly)
- (Weekend)

To change the chrono program, press

If a certain chrono program is not enabled, the card is gray.

Press to set the time

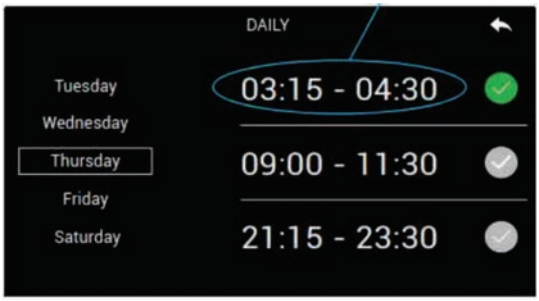

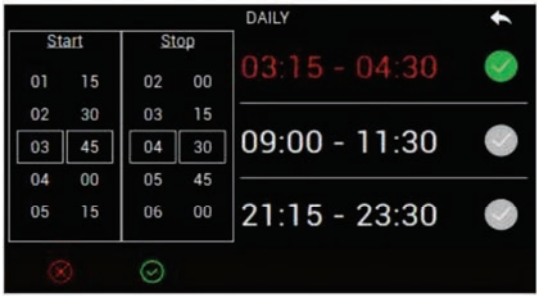

Choose the times of turning the boiler on and off.

9 SYSTEM MENU

This menu is password-protected and enables the review of all the parameters and the possibility of modification of each individual parameter.

ONLY AUTHORIZED MAINTENANCE STAFF CAN ENTER THIS MENU

To access the system menu, press

MENU	DESCRIPTION
Reduction gear 1	Reduction gear 1 menu
Reduction gear 2	Reduction gear 2 menu
Exhaust gas fan	Exhaust gas fan menu
Ancillary fan	Ancillary fan menu
Combustion fan	Combustion fan menu
Thermostats	Thermostat menu

Exhaust gas thermostats	Exhaust gas thermostat menu
Times	Time menu
Default settings	Default settings menu
Enables	Enable menu
Lambda	Lambda transducer menu
Vacuum sensor	Vacuum sensor menu
Pyrolisis	Pyrolisis regulator menu
Delta	Temp. delta menu
Pressure sensor	Pressure sensor menu
Counters	Counter menu
Component testing	Component testing menu
Factory settings	Restore factory settings

10 COMBUSTION POWER

The ***ABC GAMA*** boiler has a completely automatized combustion control system. Combustion power is automatically determined according to the ratio of water temperature difference and the Th24 value:

* water temperature < Th24 - D08 = the sistem operates with maximum power

* Th24 - D08 < water temperature < Th24 = combustion power is chosen proportionally (the bigger the difference between the water temperature and the Th24 value, the bigger combustion power)

* water temperature >Th24 = the system goes into modulation

Example: Th24= 75; D08=5; P03=5

Water temperature	< 70	71	72	73	74	75
Power	5	4	3	2	1	Mod

Note:

The algorithm given in the previous example depends predominantly on the lambda transducer reading value, i.e. the percentage of oxygen in exhaust gases

10.1 REDUCTION GEAR CALIBRATION

The reduction gear work time modification menu

10 calibration steps are available, 5 for increasing and 5 for decreasing values, 0 refers to the factory setings. Calibration influences modes and modulation.

Example: P10= 10%, Step= -1

Factory values	C03=2,0	C04=3,0	C05=4,0	C06=5,0	C07=6,0	C11=1,0
Calibrated values	C03=1,8	C04=2,7	C05=3,6	C06=4,5	C07=5,4	C11=0,9

10.2 FAN CALIBRATION

Menu for changing the fan speed.

10 calibration steps are available, 0 refers to the factory setings. Calibration influences modes and modulation.

Example: P16=5%; Step=+3

Factory values	U03=1000	U04=1200	U05=1400	U06=1600	U07=1800	U11=900
Calibrated values	U03=1150	U04=1380	U05=1610	U06=1840	U07=2070	U11=1030

Note:

Calibration can be used only after the consultation with the maintenance staff.

10.3 BREAKDOWN OF THE MAIN POWER SUPPLY

In the event of power outage, the system shall save all the most important data. With the arrival of the electric energy, the system estimates the saved data and reacts in the following way:

- If the power supply cut was shorter than 10 seconds, the system returns to the previous state

- If the boiler was in the mode and the cut was longer than 10 seconds, the system goes to re-ignition.

11 MAINTENANCE OF THE LAMBDA SYSTEM

The lambda transducer calibration is recommended after the first 300 hours of the boiler's incessant work and, after that, once a year, or more often, if necessary.

To perform the lambda transducer calibration, it is necessary to do the following:

1. Make sure that the lambda transducer is on fresh air, without the presence of exhaust gases. The temperature is not important, only that there are no gases of any kind (the boiler is off)
2. It is necessary to check carefully:

- if the transducer is properly positioned in its casing
- check the cable connections
- check the connection between SY Lambda 100 and SY 400 board

turn the boiler on by using the main switch

3. Choose the lambda menu - **Calibration Verification** - **System Menu.** Start the calibration check

The process consists of two steps:

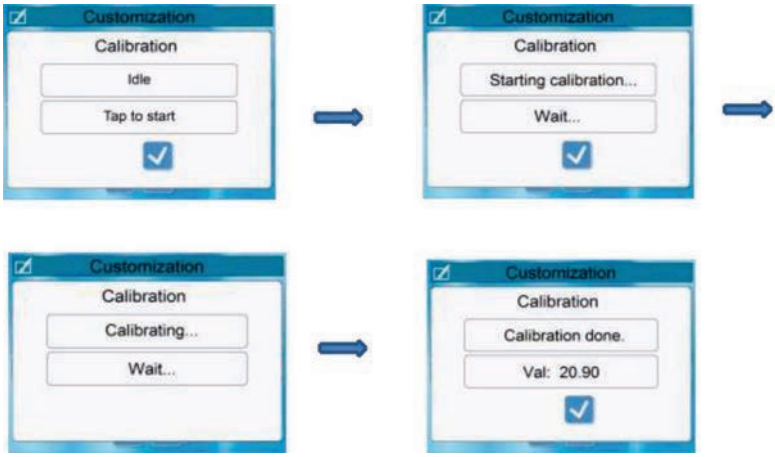

- When you enter the sub-menu, the message ,,Idle,, is on the display – To start the calibration, press ,,Tap to start,,

- The message ,,Starting calibration,, is on the display- If the result at the end of the process is within the values **20,95% ± 1%,** it is not necessary to perform the sensor calibration. The message ,,Calibration done,, appears on the display with the written oxygen value.

- If the value at the end of the process is outside the value frame**20,95 ± 1%** the message „Calibrating“appears on the display, and the process continues.

- After 150 seconds, if the value is within **20,95 ± 1%** the message ,,Calibration done,,

will appear with the written oxygen value.

- If the value is outside the frame **20,95 ± 1%** the message ,, Calibration error,, will appear.

Repeat the calibration procedure once more and, if the oxygen value is outside **20,95 ± 1%** change the lambda sensor or the module.

Note:

- The ,,Starting calibration,, step can be stopped by pressing
- ,, The ,,Calibrating,, phase cannot be stopped
- If the boiler is turned on during the calibration process, the process is stopped and the system returns to the ,,Idle,, mode.
- If there is an error in communication between the lambda transducer and the module, the operation stops and the ,,Calibration error,, message appears.
-

12 CLEANING AND MAINTAINING THE BOILER

Regular boiler cleaning prolongs its life and represents the basic prerequisite for untroubled and reliable work.

Check the system pressure regularly

If the system pressure drops:
- refill the system with water

Note:

If this is a common occurrence, it is necessary to notify a plumber.

If sudden pressure changes occur

- call a plumber to check the expansion vessel

Check the safety valve sealing regularly and make sure the valve is not dirty

The valve check must be performed in accordance with the instruction by the manufacturer.

12.1 CLEANING THE BOILER

Ash containers have to be discharged in the intervals depending on pellet quality and boiler mode (at most every 4-5 days). Burner grate and the furnace have to be controlled and, if necessary, cleaned at least once in seven to ten days.
By using an ash vacuum cleaner, you make it easier to remove the ash from the boiler.

ATTENTION

Before the cleaning, it is necessary to make sure the ash is completely cooled.

12.2 Cleaning the fan case and the heat exchanger

Depending on the intensity of using the boiler, these surfaces need to be cleaned 2-3 times during the heating season and the cleaning after the season is obligatory.

1. Remove the cover from the boiler

Unscrew, turn the lever 90 degrees to the left and then lift the entire cover

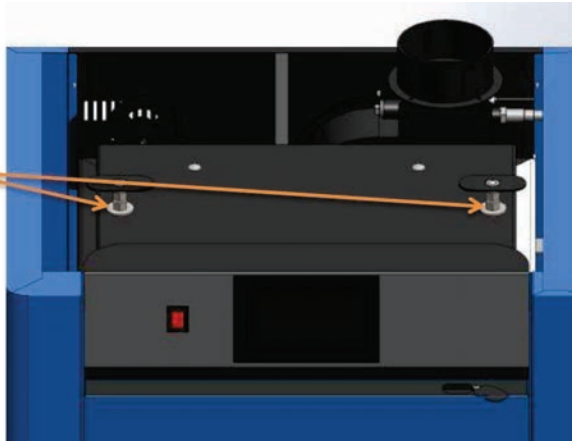

2. Lift the next cover by using the handle

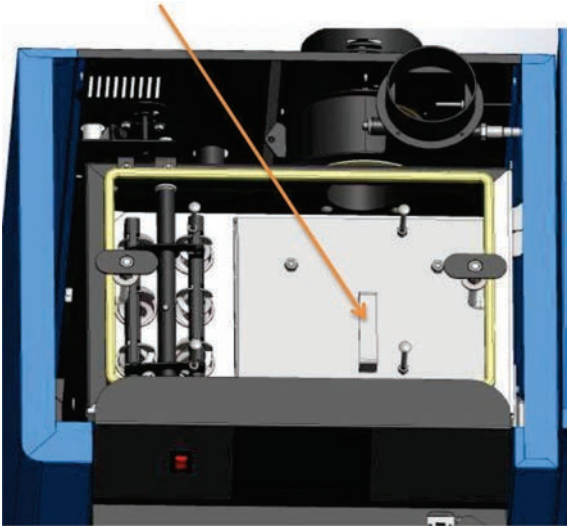

3. It is necessary to clean (vacuum) all the areas marked with arrows

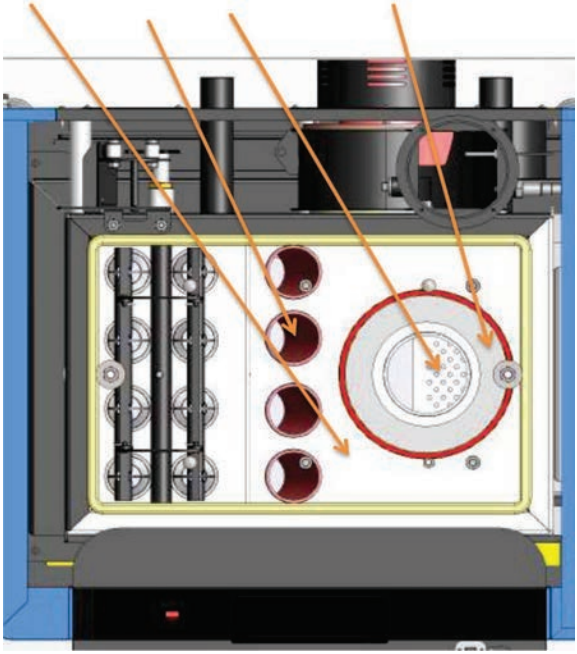

4. Clean (vacuum) the fan case from ash

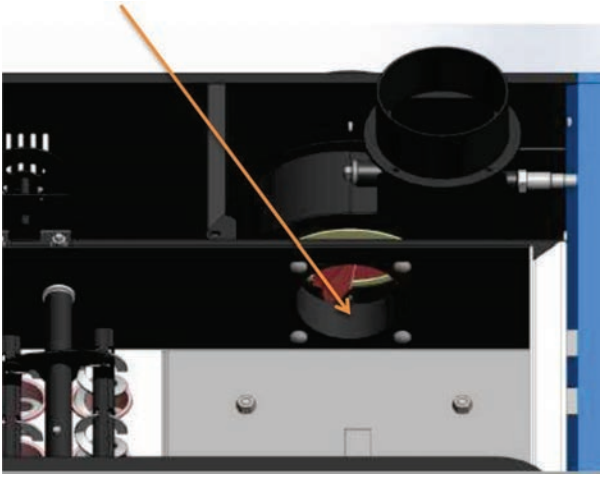

5. Turbulators are to be taken out and cleaned at the end of the heating season, or if necessary, earlier

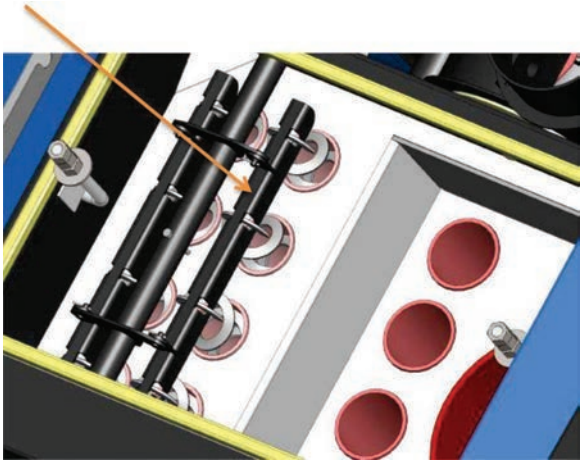

To take out the tubulators, hire or consult the authorized maintenance staff.

6. Exhaust gas transducer cleaning: - loosen the screw that tightens the transducer

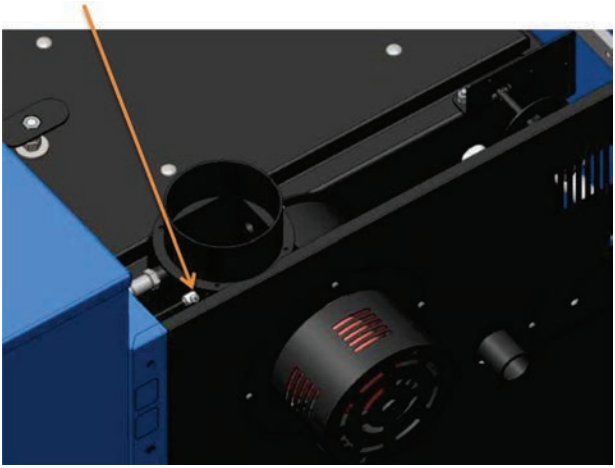

- clean the transducer with a clean rug

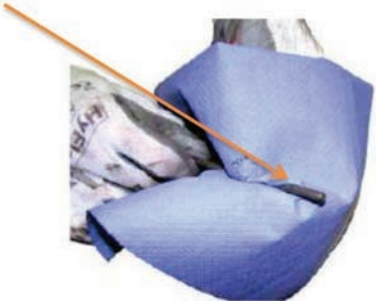

7. Return all the parts to their places in reverse order, taking care the covers are sealed .

ATTENTION

Regular boiler maintenance and interventions from the authorized workers shall provide a long and safe life of your heating system. At the same time, it shall secure your system staying eco-friendly and working efficiently and cost-effectively.

13. INFORMATION ON DISPOSAL

13.1 Ash disposal

* Ash should be disposed of in accordance with the waste management regulations

13.2 System component disposal

* Make sure the parts are disposed of in accordance with the regulations and in an eco-friendly way.

* You can put aside and select recyclable materials and send them to the recycling center.

Notes about service, maintenance and repairs

We recommend you to keep records about the works done. Keep track of the performed maintenance, interventions and disturbances.

It enables both you and the maintenance staff to review the system condition.

Date Contractor	**Service, maintenance, cleaning** Works done/ Parts replaced

ABC PROIZVOD Ltd.
Miloš Obrenović street, 2, 31000 Užice
telephones: +381 (0)31 514 501. 514 502
e-mail: office@abcproizvod.rs
www.abcproizvod.rs